DTO
created to be a leader
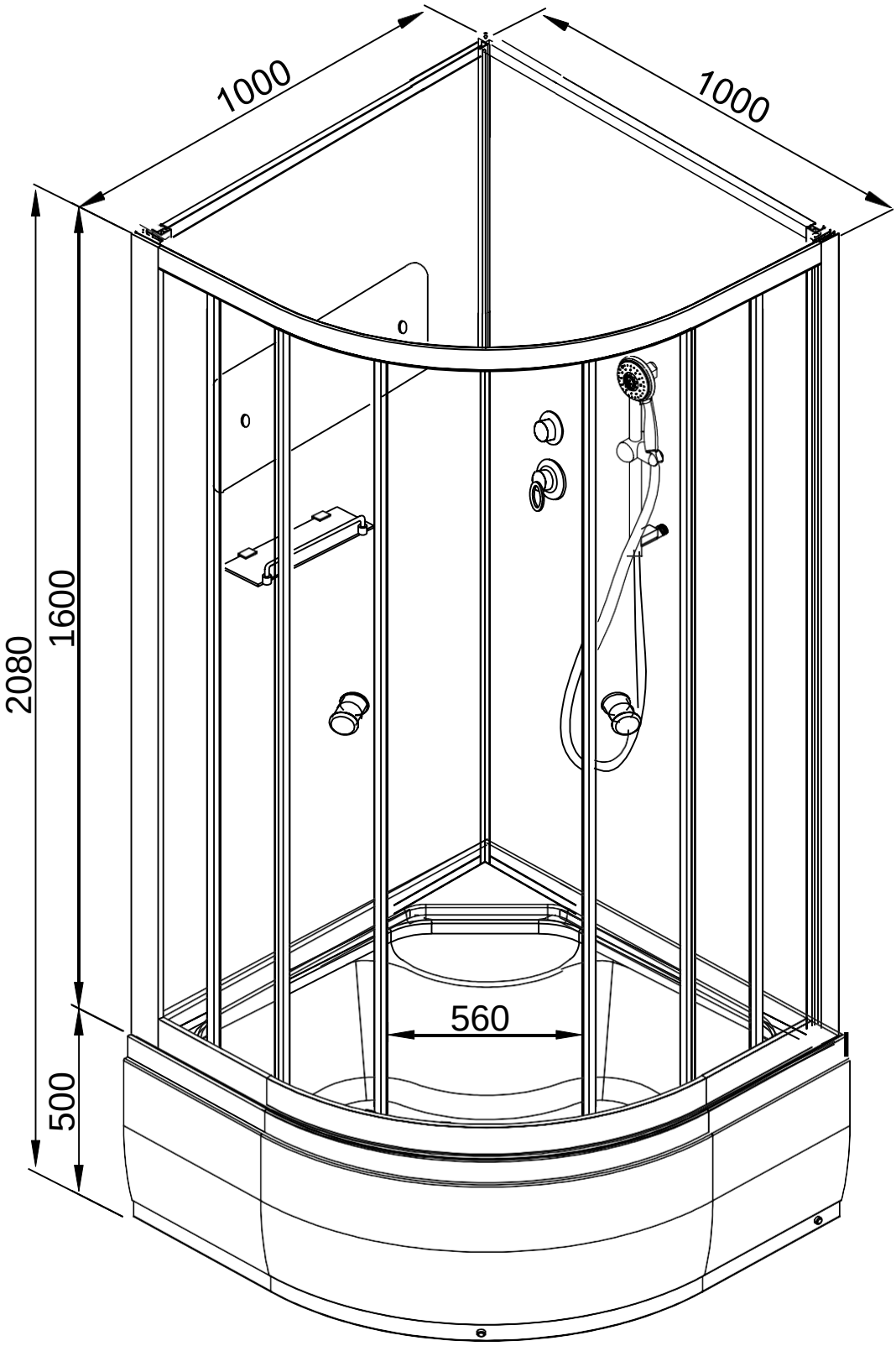
D10N